701X SERIES

SPECIFICATION

RATING:	15A 125VAC, 10A 250VAC (UL, CUL) 20A 125/250VAC (IN HOUSE TEST)
INSULATION RESISTANCE:	DC 500V 100MΩ OR MORE
CONTACT RESISTANCE:	DC 2-4V 1A 20mΩ OR LESS
WITHSTAND VOLTAGE:	AC 1500V FOR 1 Min
AMBIENT TEMPERATURE:	0~55°C
ELECTRICAL LIFE:	6,000 CYCLES

SIZE

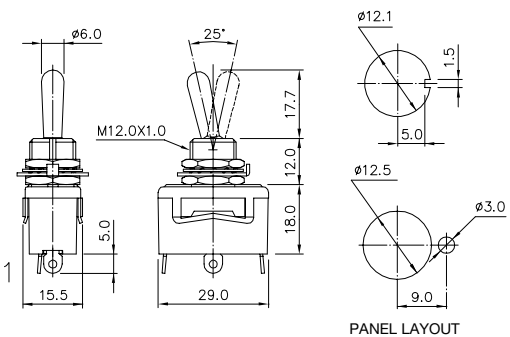

HOW TO ORDER

701X – □ – □ – □ – □

SWITCH FUNCTION

7011 : ON-OFF
7012 : ON-ON
7013 : ON-OFF-ON
7014 : (ON)-OFF
7015 : ON-(ON)
7016 : (ON)-OFF-(ON)
7017 : ON-OFF-(ON)

SHAFT

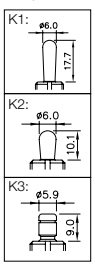

RATING

C1: (UL) 10A 250VAC 15A 125VAC
C1: 20A 250VAC 20A 125VAC
C2: 10A 250VAC 15A 125VAC
C3: 10A 250VAC 15A 125VAC
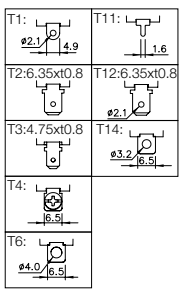
TERMINAL