601X SERIES

SPECIFICATION

RATING:	16A 125VAC, 10A 277VAC (UL, CUL) 16(6)A 250V~ T100 (ENEC)
INSULATION RESISTANCE:	DC 500V 100MΩ OR MORE
CONTACT RESISTANCE:	DC 2-4V 1A 20mΩ OR LESS
WITHSTAND VOLTAGE:	AC 1500V FOR 1 Min
AMBIENT TEMPERATURE:	0~100°C
ELECTRICAL LIFE:	10,000 CYCLES

SIZE

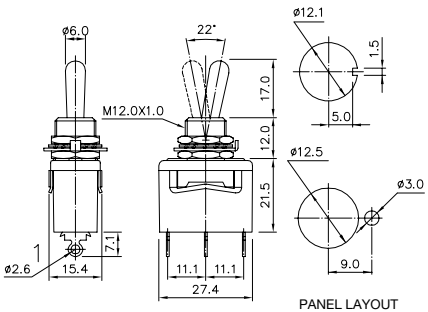

HOW TO ORDER

601X – □ – □ – □ – □

SWITCH FUNCTION	SHAFT	TERMINAL	SAFETY
6011 : ON-OFF(UL, C-UL)	K1: ø5.8, 17.0	T1: ø2.6	S1
6012 : ON-ON(UL, C-UL)		T2: 6.35xt0.8	
6013 : ON-OFF-ON	K3: ø5.8, 14.0	T3:	
6014 : (ON)-OFF			
6015 : ON-(ON)			
6016 : (ON)-OFF-(ON)			
6017 : ON-OFF-(ON)			